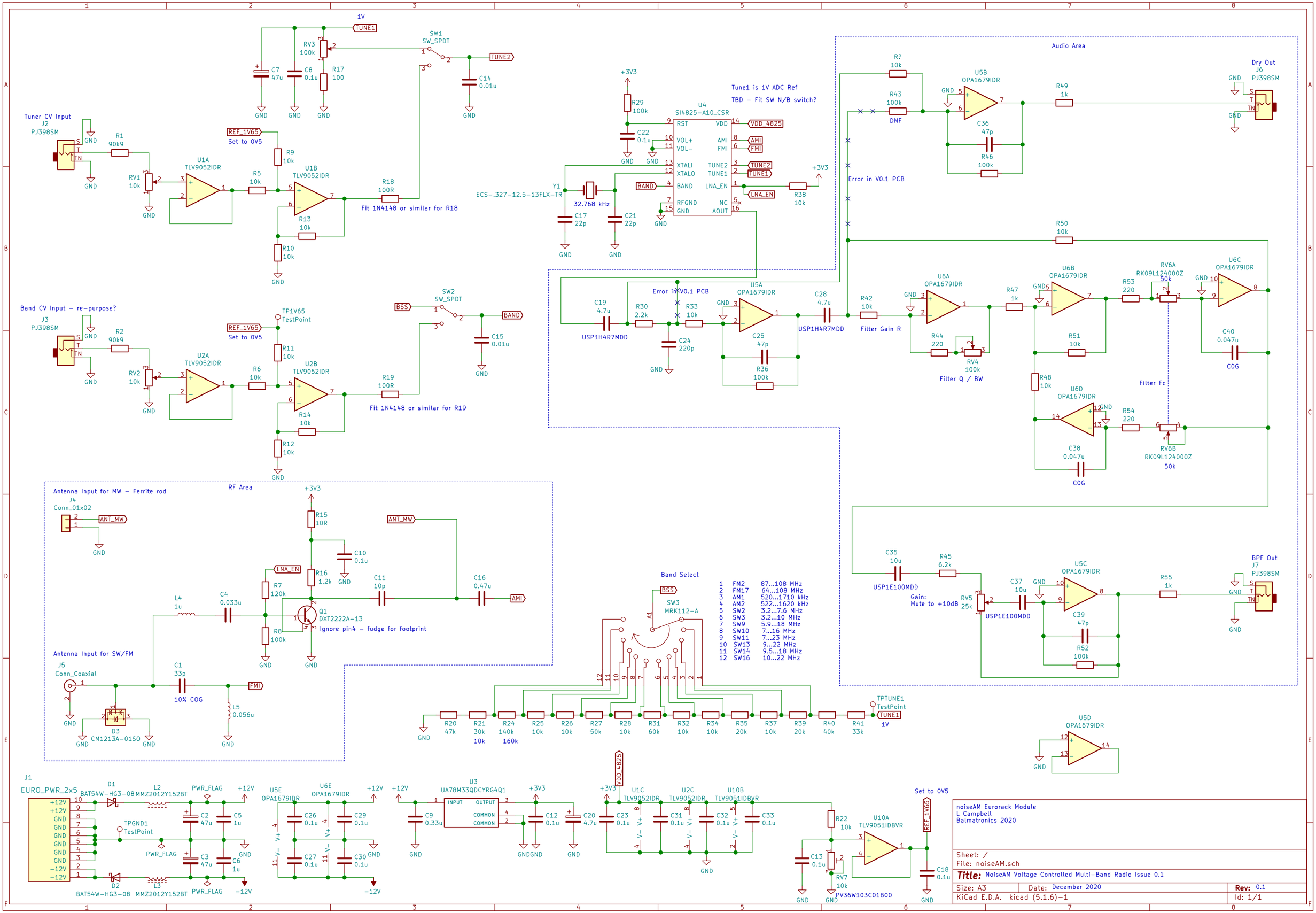
Tuner CV Input
J2
PJ398SM
R1
90k9
RV1
10k
U1A
TLV9052IDR
REF_1V65
Set to 0V5
R9
10k
R5
10k
U1B
TLV9052IDR
R13
10k
R10
10k
R18
100R
Fit 1N4148 or similar for R18
TUNE1
1V
RV3
100k
C7
47u
C8
0.1u
R17
100
SW1
SW_SPDT
TUNE2
C14
0.01u
Band CV Input – re-purpose?
J3
PJ398SM
R2
90k9
RV2
10k
U2A
TLV9052IDR
R6
10k
TP1V65
TestPoint
R11
10k
U2B
TLV9052IDR
R14
10k
R12
10k
R19
100R
Fit 1N4148 or similar for R19
SW2
SW_SPDT
BSS
BAND
C15
0.01u
RF Area
Antenna Input for MW – Ferrite rod
J4
Conn_01x02
ANT_MW
R15
10R
C10
0.1u
R16
1.2k
LNA_EN
R7
120k
R8
100k
Q1
DXT2222A-13
Ignore pin4 – fudge for footprint
L4
1u
C4
0.033u
C11
10p
C16
0.47u
AMI
Antenna Input for SW/FM
J5
Conn_Coaxial
C1
33p
10% C0G
FMI
L5
0.056u
D3
CM1213A-01SO
+3V3
R29
100k
C22
0.1u
U4
SI4825-A10_CSR
RST
VOL+
VOL-
XTALI
XTALO
BAND
RFGND
GND
VDD
AMI
FMI
TUNE2
TUNE1
LNA_EN
NC
AOUT
VDD_4825
Y1
ECS-.327-12.5-13FLX-TR
32.768 kHz
C17
22p
C21
22p
R38
10k
Tune1 is 1V ADC Ref
TBD – Fit SW N/B switch?
Audio Area
R?
10k
R43
100k
DNF
Error in V0.1 PCB
U5B
OPA1679IDR
C36
47p
R46
100k
R49
1k
Dry Out
J6
PJ398SM
R50
10k
C19
4.7u
USP1H4R7MDD
R30
2.2k
R33
10k
C24
220p
U5A
OPA1679IDR
C25
47p
R36
100k
C28
4.7u
R42
10k
Filter Gain R
U6A
OPA1679IDR
R44
220
RV4
100k
Filter Q / BW
R47
1k
U6B
OPA1679IDR
R51
10k
R48
10k
U6D
OPA1679IDR
C38
0.047u
C0G
R53
220
RV6A
RK09L124000Z
50k
U6C
OPA1679IDR
C40
0.047u
C0G
Filter Fc
R54
220
RV6B
RK09L124000Z
50k
C35
10u
USP1E100MDD
R45
6.2k
Gain:
Mute to +10dB
RV5
25k
C37
10u
U5C
OPA1679IDR
C39
47p
R52
100k
R55
1k
BPF Out
J7
PJ398SM
Band Select
SW3
MRK112-A
1 FM2 87...108 MHz
2 FM17 64...108 MHz
3 AM1 520...1710 kHz
4 AM2 522...1620 kHz
5 SW2 3.2...7.6 MHz
6 SW3 3.2...10 MHz
7 SW9 5.9...18 MHz
8 SW10 7...16 MHz
9 SW11 7...23 MHz
10 SW13 9...22 MHz
11 SW14 9.5...18 MHz
12 SW16 10...22 MHz
R20 47k
R21 30k
R24 140k
R25 10k
R26 10k
R27 50k
R28 10k
R31 60k
R32 10k
R34 10k
R35 20k
R37 10k
R39 20k
R40 40k
R41 33k
TPTUNE1
TestPoint
U5D
OPA1679IDR
J1
EURO_PWR_2x5
D1
BAT54W-HG3-08
L2
MMZ2012Y152BT
PWR_FLAG
+12V
C2
47u
C5
1u
TPGND1
TestPoint
C3
47u
C6
1u
D2
L3
-12V
U5E
OPA1679IDR
U6E
OPA1679IDR
C26
0.1u
C29
0.1u
C27
0.1u
C30
0.1u
U3
UA78M33QDCYRG4Q1
INPUT
OUTPUT
COMMON
C9
0.33u
C12
0.1u
C20
4.7u
VDD_4825
U1C
TLV9052IDR
U2C
TLV9052IDR
U10B
TLV9051IDBVR
C23
0.1u
C31
0.1u
C32
0.1u
C33
0.1u
R22
10k
U10A
TLV9051IDBVR
C13
0.1u
RV7
10k
PV36W103C01B00
Set to 0V5
C18
0.1u
noiseAM Eurorack Module
L Campbell
Balmatronics 2020
Sheet: /
File: noiseAM.sch
Title: NoiseAM Voltage Controlled Multi-Band Radio Issue 0.1
Size: A3
Date: December 2020
Rev: 0.1
KiCad E.D.A. kicad (5.1.6)-1
Id: 1/1